Volkswagen T1

BATTERY-POWERED RIDE-ON

< 2WD >

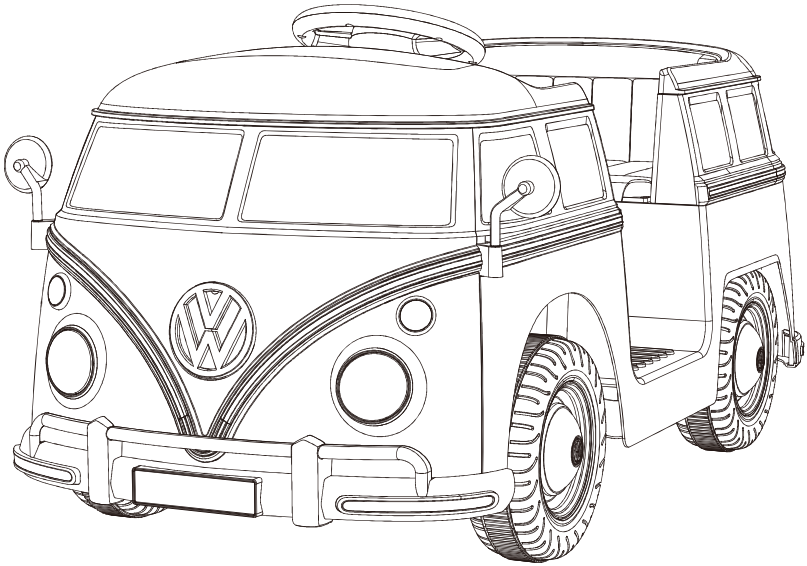

OWNERS MANUAL

with Assembly Instructions

Read and understand this entire manual before using!

Please keep this manual for future reference as it contains important information. Before first time use, charge the battery for at least 4-6 hours, but no more than 10 hours.

About Your New Vehicle

On the purchase of your new Ride-On.

This ride-on car will provide your child with many miles of riding of enjoyment. To help assure you and your rider a safe ride we ask you to please read this manual carefully, and keep it for future reference.

Follow the recommendations in this manual, they are designed to improve the safety and operation of your ride-on car and its rider.

Specification

Battery	6V4.5AH *1	12V4.5AH*1	12V7AH*1
Charger input	6V500mA	12V500mA	12V1000mA
	Depend on local voltage		
Motor	390-18000 *2	390-18000 *2	390-18000 *2
Steering Motor	390-5500 *1	390-5500 *1	390-5500 *1

Suitable age: 3+ Years

Charge time: 8 - 12 hours

Load capacity: 30 kg

Size of car:v 88 * 49.5 * 44 CM

Speed: 3-5 km/h

Parts List

1 Vehicle body

x 1

2 Side mirror
L & R

x 2

3 Driving wheel

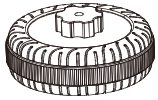

x 2

4 Normal wheel

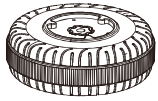

x 2

5 M8 washer
(Pre-assembled)

x 4

6 M10 washer
(Pre-assembled)

x 2

7 M8 lock nut
(Pre-assembled)

x 4

8 Steering wheel

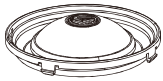

x 4

9 Seat
(Pre-assembled)

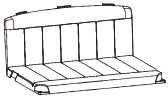

x 1

10 Steering wheel

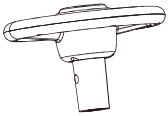

x 1

11 M5x30 machine screw
(Pre-assembled)

x 1

12 M5 lock nut
(Pre-assembled)

x 1

13 #4x12 screw
(Pre-assembled)

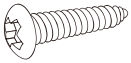

x 2

14 Charger

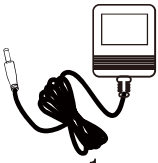

x 1

15 Socket wrench

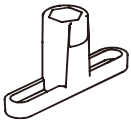

x 2

16 Remote control

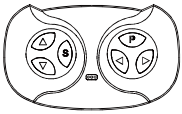

x 1

Parts Diagram

HINT: Some parts shown are assembled on both sides of vehicle

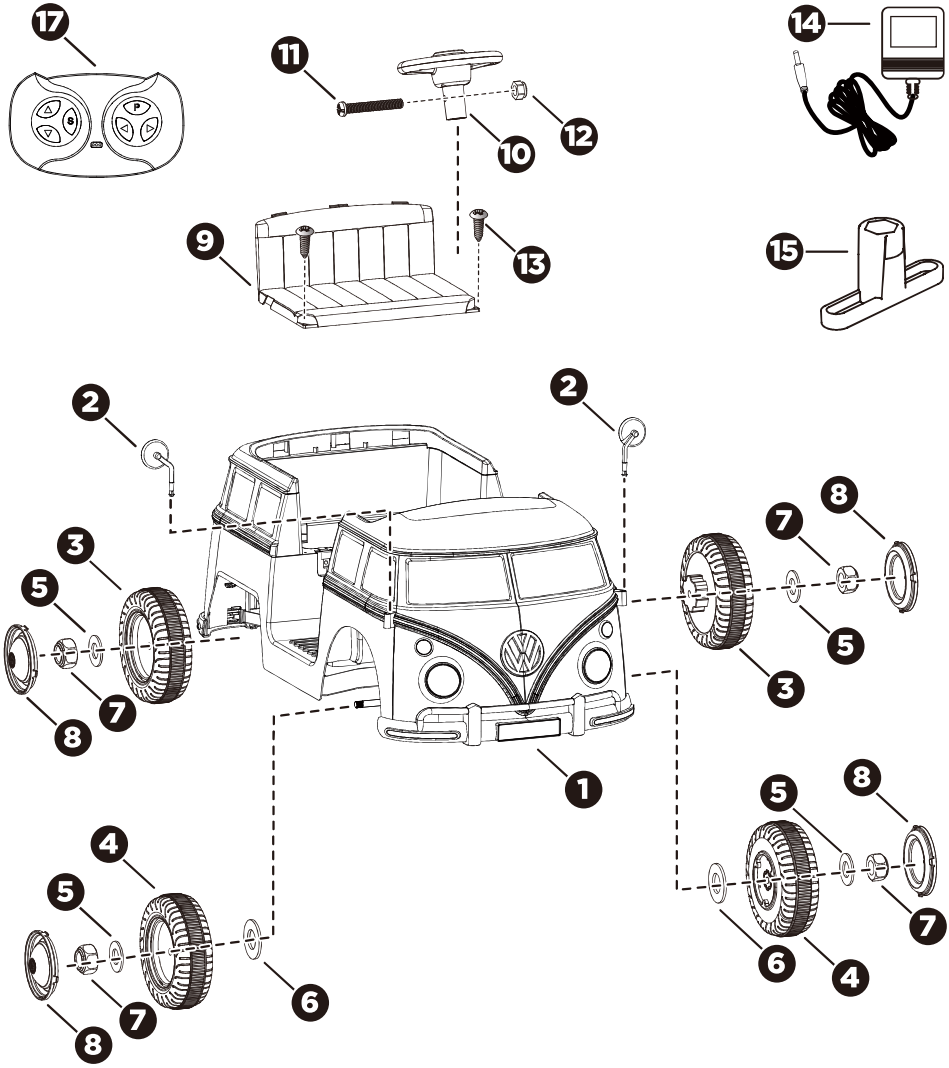

Assembly tools required:

Screwdriver (not included)

⚠ WARNING!

- **CHOKING HAZARD** - Small parts. Not suitable for children under 96 months. The product contains small parts, keep children away when assembling.
- **ADULT ASSEMBLY REQUIRED.**
- Always remove protective material and poly bags and dispose before assembly.
- Protective equipment should be worn. Always wear shoes and sit in the seat when operating the vehicle.
- Only drive on level ground. Never use on the lawn.
- Never leave a child unattended.
- Keep your hands, hair, and clothes away from moving parts.

⚠ SAFETY

The following safety hazards may result in serious injury or death:

- Never leave child unattended. Direct adult supervision is required. Always keep child in view when child is in vehicle.
- To reduce the risk of injury, adult supervision is required. Never use in roadways, near motor vehicles, on or near steep inclines or steps, swimming pools or other bodies of water, always wear shoes, and never allow more than 1 rider.
- Never use in unsafe conditions such as snow, rain, loose dirt, mud, sand, or gravel, otherwise may result in an unexpected accident such as tipping over, and could damage the electrical system or battery
- Not to be used in traffic.
- This toy should be used with caution since skill is required to avoid falls or collisions causing injury to the user or third parties.
- This toy is unsuitable for children under 96 months due to its maximum speed; Maximum user weight is 30kg.
- This toy has no brake.

⚠ BATTERY INFORMATION

- Non-rechargeable batteries are not to be recharged.
- Rechargeable batteries are to be removed from the toy before being charged.
- Rechargeable batteries are only to be charged under adult supervision.
- Different types of batteries or new and used batteries are not to be mixed.
- Batteries are to be inserted with the correct polarity.
- Exhausted batteries are to be removed from the toy.
- The supply terminals are not to be short-circuited.

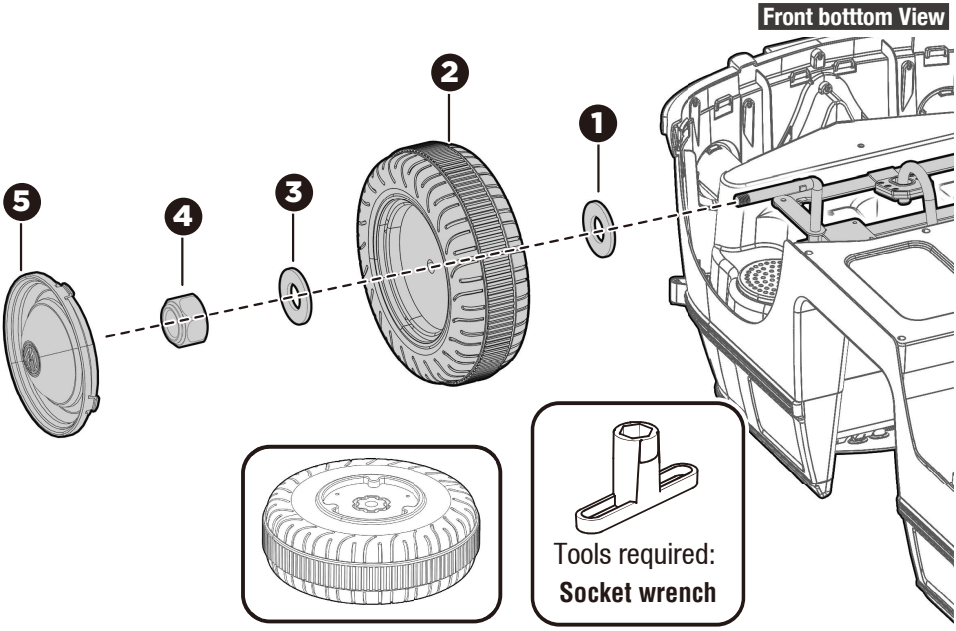

1. Slide a M10 washer onto the front axle.
2. Slide the normal wheel (gear side first) onto the front axle.
3. Slide a M8 washer onto the front axle.
4. Tighten a M10 lock nut to the end of the front axle with a socket wrench.
5. “Snap” the wheel cover to the front wheel.

Repeat for the other front wheel.

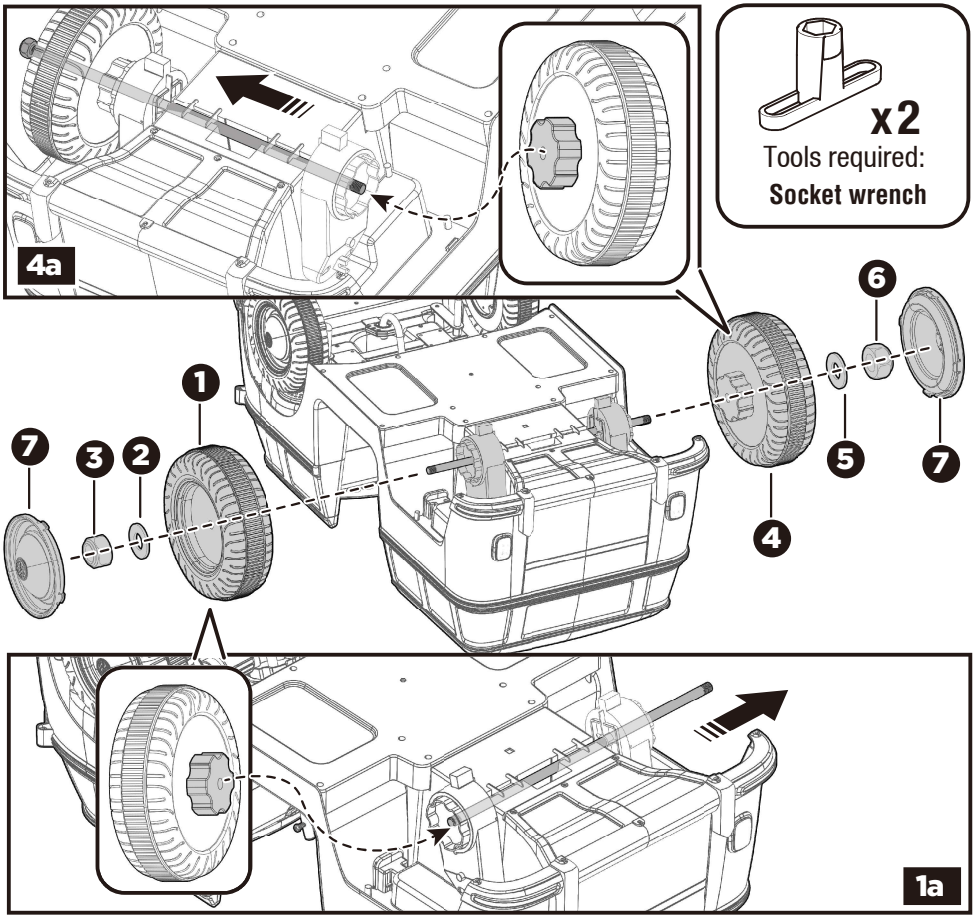

1. Move the rear axle to the right until the rear wheel can be assembled into the body as fig 1a, and move the rear axle back to through the hole in the center of the wheel.

2. Slide a M8 washer onto the rear axle.

3. Tighten a M10 lock nut to the end of the rear axle.

4-6. Repeat steps 1-4 to assemble the other rear wheel.

HINT: An extra socket wrench has been provided to hold the Lock Nut on the other side of the rear axle while tightening the Lock Nut.

7. “Snap” a wheel cover to each wheel.

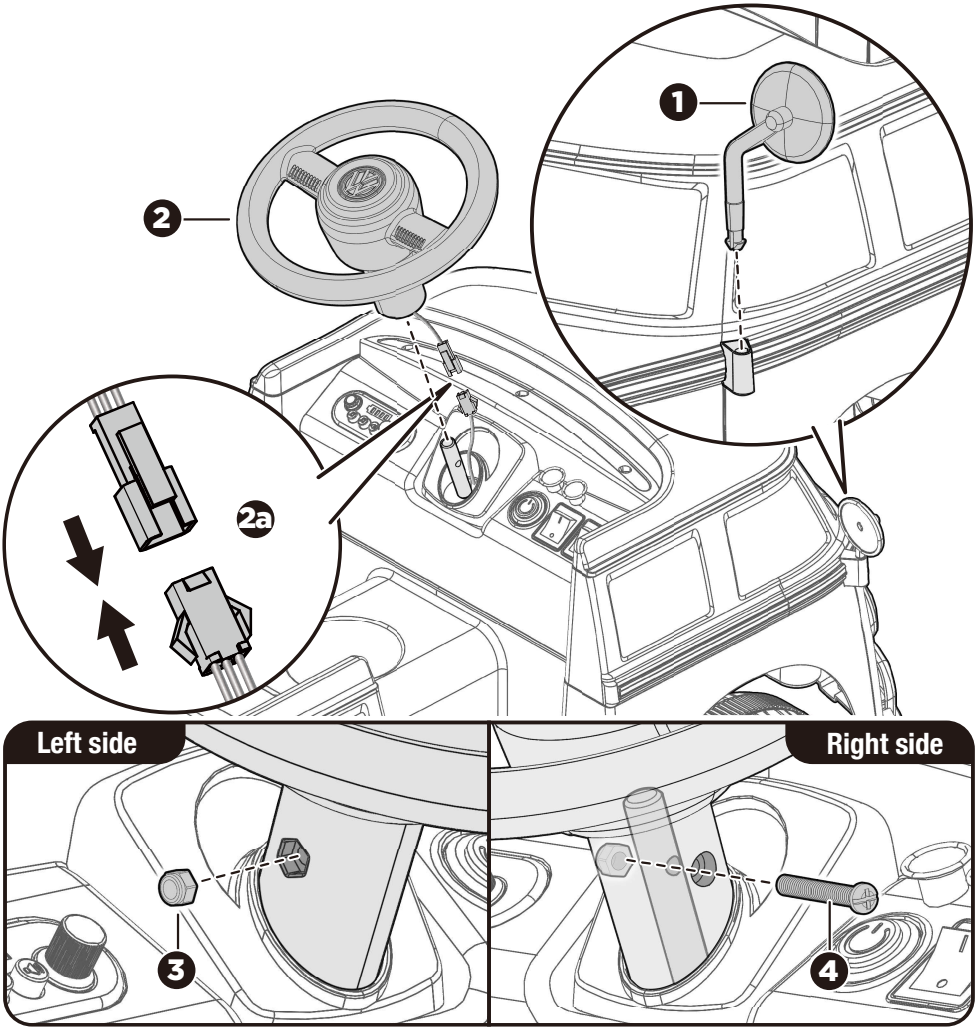

1. Fit the side mirror into the holes on the side of the vehicle, push until you hear it “click” into place.
2. Plug the connector on the steeing wheel into the connector from the vehicle body (fig 2a), and hide the plugged connectors into the hole on body. Fit the steering wheel to the end of the steering column.
3. Insert the M5 nut into the slot at left side of the steering wheel.
4. Line up the holes on the steering wheel with the holes on the steering column, insert the M5x40 machine screw and tighten.

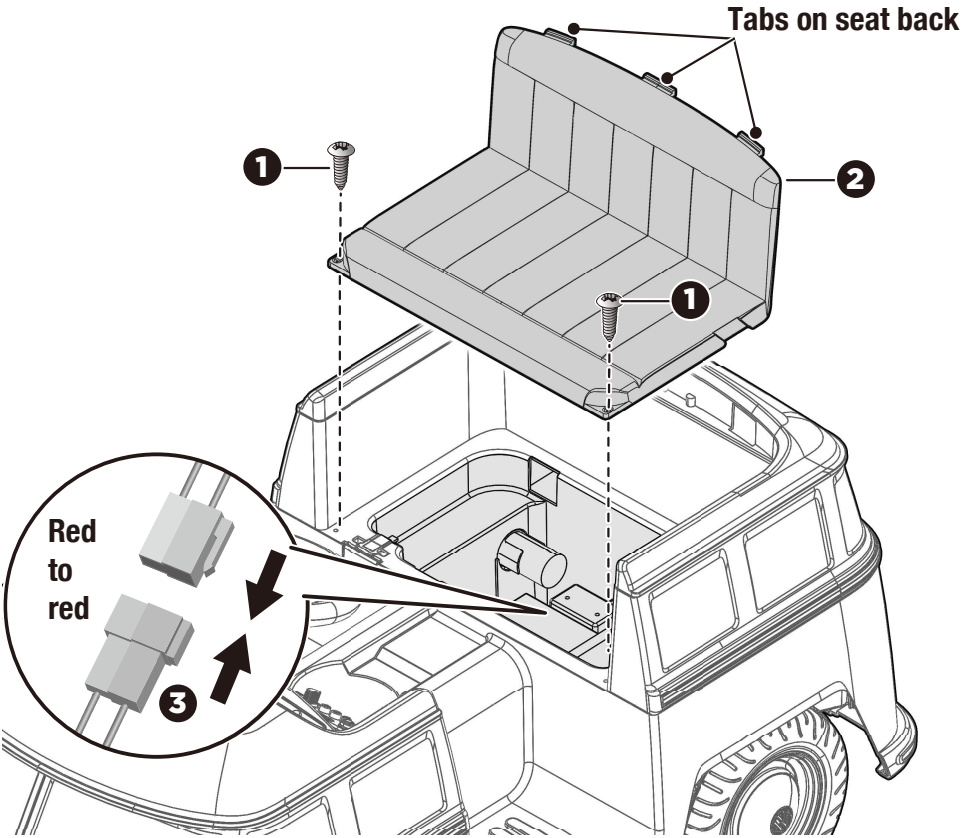

1. Use a screwdriver to loosen the two screws on the both sides of the seat.
2. Remove the seat.
3. Plug the **red** connector on the vehicle body into the **red** connector on the battery.
4. Replace the seat.

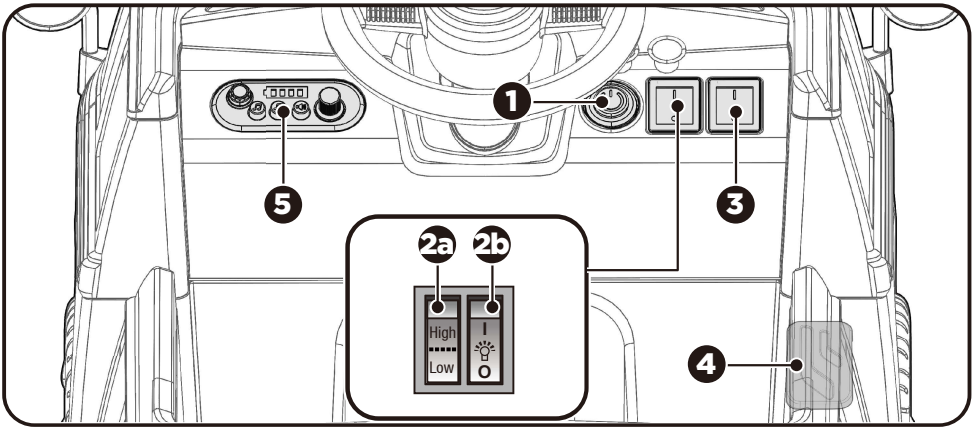

1. Power switch: Turn the vehicle on and off.

2a. High/Low speed switch:

- Rock the switch in 'high' position, the product will move forward in high speed.
- Rock the switch in 'low' position, the product will move forward in low speed.
- NOTE: High speed will only applies to forward function.

2b. Light switch: Turn the lights on and off.

3. Forward/stop/reverse switch: Changes the direction that vehicle moves from forward to reverse.

- To move the vehicle forward, shift the lever to top position.
- To move the vehicle backward, shift the lever to down position.
- Move the switch to the middle, the product will stop and not run.

4. Foot pedal: Applies power (speed) to the vehicle.

- To move the car, press the pedal down.
- To brake or slow down, release pressure from the pedal.

5. Audio player:

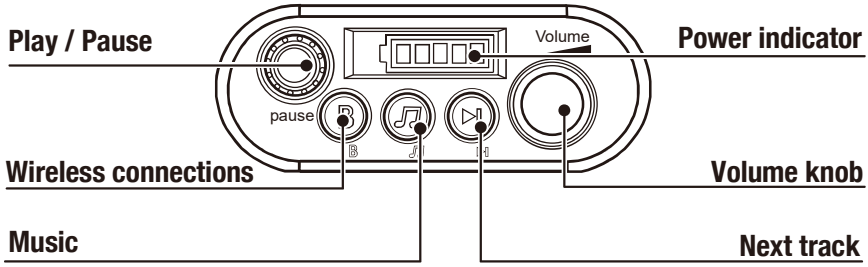

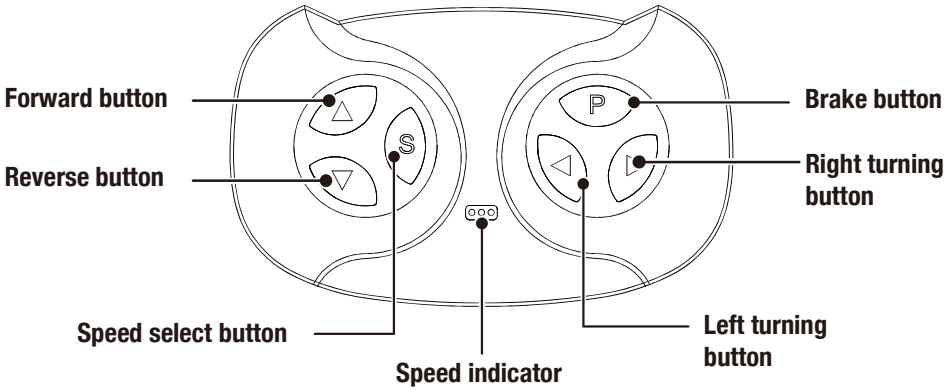

Attach the batteries of controller

Lift the battery compartment door on the back of the controller and insert two AAA(LR03) batteries.

HINT: Batteries not included. Refer to the Battery Information on the page 4.

1. Build connection

A. Turn off the ride-on.

B. Press and hold the forward (△) and reverse (▽) buttons on the controller for 3 seconds, the speed indicator flashes, mean that the remote control is in the connected state.

C. Then power on the ride-on:

- The speed indicator goes to long bright, means the connection successful.
- If the speed indicator no response (keep flashing), means the connection failed. Turn off the remote conntroller (by removing the batteries) and the rinde-on. And try again.

2. Brake button

Press the button to stop the vehicle, press it again to release the brake.

3. Speed select button

The switch operates the vehicle to move in low, normal and high speed.

NOTE:

- Leave the remote controller idling for about 10 seconds, it will shut down automatically.
- Rebuild connection when you replace the batteries of the remote controller.

⚠ WARNING!

- **ONLY an adult is allowed charge and recharge the battery!**
- **This product with Charging Protection: when charging, all functions will be cut off.**

- Turn off the product when charging.
- Before the first use, you should charge the battery for 4-6 hours. Do not recharge the battery for more than 10 hours to avoid overheating the charger.
- When the vehicle begins to run slowly, recharge the battery.
- After each use or once a month minimum recharge time as 8 to 12 hours, less than 20 hours at most.
- Use the only rechargeable battery and charger supplied with your vehicle. NEVER substitute the battery or the charger with another brand. Using another battery or charger may cause a fire or explosion.
- Do not use the battery or charger for any other product.
- When the product is stationary, the power indicator will tell you how much power is remaining in the battery. If only one indicator light remains, please recharge the battery.

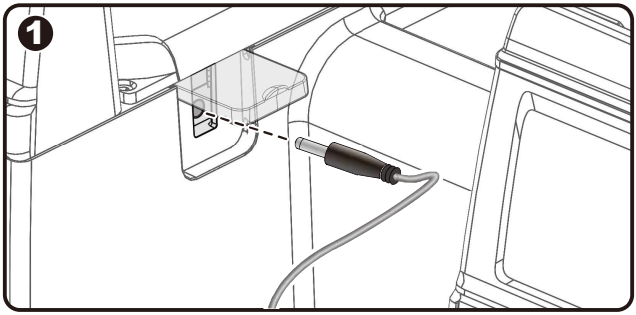

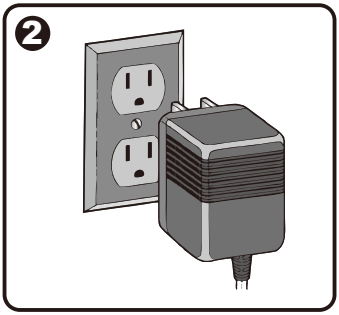

1. Plug the charger port into the input socket (the socket is below the seat, open the charging cover first).
2. Plug the charger plug into a wall outlet. The battery will begin charging.

Troubleshooting Guide

Problem	Possible Cause	Solution
Vehicle does not run	Battery low on power	Recharge battery.
	Thermal fuse has tripped	Reset fuse, see <Fuse>
	Battery connector or wires are loose	Check that the battery connectors are firmly plugged into each other. If wires are loose around the motor ***contact your distributor please.***
	Battery is dead	Replace battery, ***contact your distributor please.***
	Electrical system is damaged	***Contact your distributor please.***
	Motor is damaged	***Contact your distributor please.***
Vehicle does not run very long	Battery is under charged	Check that the battery connectors are firmly plugged into each other when recharging
	Battery is old	Replace battery, ***contact your distributor please.***
Vehicle runs sluggishly	Battery low on power	Recharge battery, ***contact your distributor please.***
	Battery is old	Replace battery, ***contact your distributor please.***
	Vehicle is overload	Reduce weight on vehicle.
	Vehicle is being used in harsh conditions	Avoid using vehicle in harsh conditions ,see <Safety>.
Vehicle needs a push to go forward	Poor contact of wires or Connectors	Check that the battery connectors are firmly plugged into each other. If wires are loose around the motor, ***contact your distributor please.***
	“Dead Spot” on motor	A dead spot means the electric power is not being delivered to the terminal connection and the vehicle needs repair. ***Contact your distributor please.***
Difficult shifting from forward to reverse or vice-versa	Attempting to shift while the vehicle is motion	Completely stop the vehicle and shift, see <Use Your New Vehicle>
Loud grinding or clicking noises coming from motor or gear box	Motor or gears are damaged	***Contact your distributor please.***
Battery will not recharge	Battery connector or adapter connector is loose	Check that the battery connectors are firmly plugged into each other.
	Charger not plugged in	Check that the battery charger is plugged into a working wall outlet.
	Charger is not working	***Contact your distributor please.***
Charger feels warm when recharging	This is normal and not a cause for concern	

Completely read through this manual and the troubleshooting guide table before calling. If you still need help resolving the problem ***Contact your distributor please.***

- It is parents' responsibility to check main parts of the toy before using, must regularly examine for potential hazard, such as the battery, charge,cable or cord, plug, screws are fastening enclosure of other parts and that in the event of such damage, the toy must not be used until that damage had been properly removed.
- Make sure the plastic parts of the vehicle are not cracked or broken.
- Occasionally use a lightweight oil to lubricate moving parts such as wheels.
- Park the vehicle indoors or cover it with a tarp to protect it from wet weather.
- Keep the vehicle away from sources of heat, such as stoves and heaters. Plastic parts may melt.
- Recharge the battery after each use. Only an adult can handle the battery. Recharge the battery at least once a month when the vehicle Raider is not being used.
- Do not wash the vehicle with a hose. Do not wash the vehicle with soap and water. Do not drive the vehicle in rainy or snowy weather. Water will damage the motor, electric system and battery.
- Clean the vehicle with a soft, dry cloth. To restore shine to plastic parts, use a non-wax furniture polish. Do not use car wax. Do not use abrasive cleaners.
- Do not drive the vehicle in loose dirt, sand or fine gravel which could damage the moving parts, motors or the electric system.
- When not using, all the electrical source should be turn off. Turn off the power switch and disconnect the battery connection.

Battery Disposal

The battery will eventually lose the ability to hold a charge. Depending on the amount of use, and varying conditions, the battery should operate for one to three years.

Important! Recycle the dead battery responsibly. The battery contains lead acid (electrolyte) and must be disposed of properly and legally. It is illegal in most areas to incinerate lead acid batteries or dispose of them in landfills. Take it to a federal or state-approved lead acid battery recycler, such as local automotive battery retailer.
Do not throw the battery away with your regular household waste!

Fuse

The battery features a thermal fuse with a rest fuse that will automatically trip and cut all power to the vehicle if the motor, electric system or battery is overloaded. The fuse will reset and power will be restored after the unit is turned OFF for 20 seconds and then turned ON again. If the thermal fuse trips repeatedly during normal use, the vehicle may need repair. **Contact your distributor please.**

To avoid losing power, follow these guidelines:

- Do not overload the vehicle.
- Do not tow anything behind the vehicle.
- Do not drive up steep slopes.
- Do not drive into fixed objects, which may cause the wheels to spin, causing the motor to overheat.
- Do not drive in very hot weather, components may overheat.
- Do not allow water or other liquids to come in contact with the battery or other electric components.
- Do not tamper with the electric system. Doing so may create a short, causing the fuse to trip.

⚠ **RISK OF FIRE. Do not bypass. Replace only with a new fuse.**